Syntos

Spreader

The Syntos is a robust wet salt spreader made of highly durable polyethylene. The series is suitable for mounting on platforms, pick-ups or narrow track vehicles, plus small towing vehicles, tractors and cars with four-wheel drive. The Syntos is available in four hopper sizes and with different frame lengths.

Highlights

- The world's only **wet salt spreader made of polyethylene**
- High **dosing accuracy** and **uniform spreading pattern**
- Extremely **resistant and corrosion-free hoppers**

Your benefits

- Durability and maximum economy
- Low centre of gravity thanks to liquid tank integrated in the hopper
- Professional control with data management available

We know how important it is that your machines and equipment are always ready to deploy. **Get in touch with us** about our range of tailored services and original spare parts.

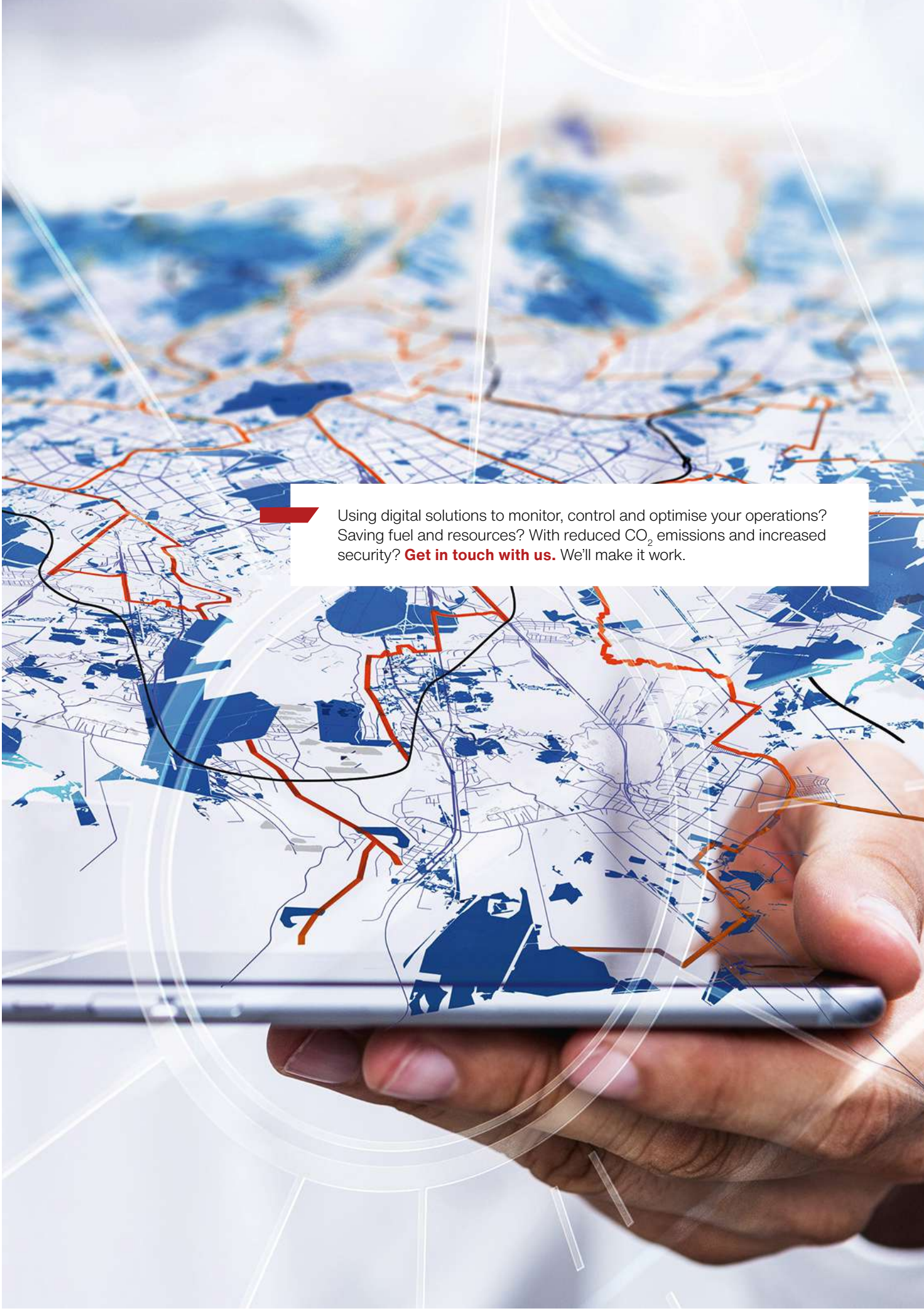

Using digital solutions to monitor, control and optimise your operations? Saving fuel and resources? With reduced CO_2 emissions and increased security? **Get in touch with us.** We'll make it work.

Performance features

Modular concept

The Syntos is a robust spreader made of durable polyethylene, with a liquid tank integrated in the hopper which enables even emptying and contributes to a low centre of gravity. Four hopper sizes from 0.8-1.7 m^3 and several different frame lengths are available. Trailed spreaders are available in three versions: 0.8 m^3, 1.1 m^3 and 1.7 m^3.

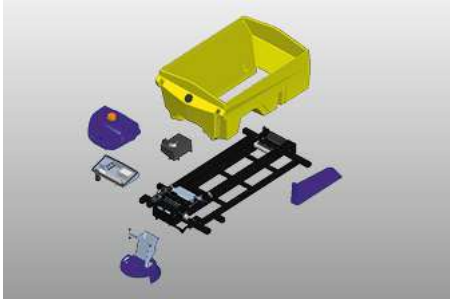

Dosage and conveyor systems

The dosing system can be either belt or auger conveyor. With the trailer version, dosing is carried out exclusively via the belt conveyor system. A V-shaped, endlessly profiled conveyor belt is used, which runs on a sliding plate and thus leaves no bearing points in the hopper. The dosing slide with an integrated lump crusher ensures high dosing accuracy. The hydraulic motor-driven auger conveyor has a variable thread which gives uniform hopper emptying.

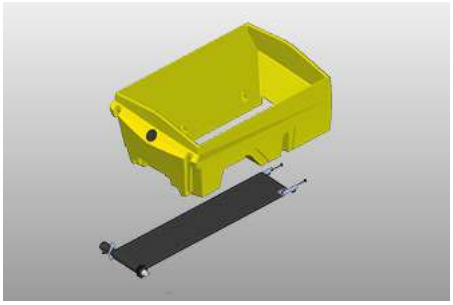

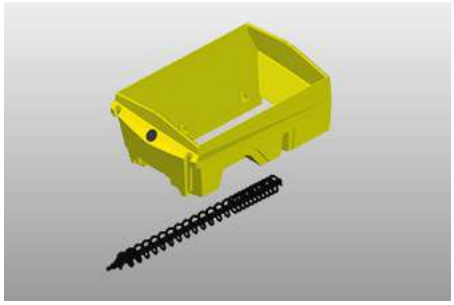

Pre-wet equipment

The spreader is equipped with an integrated all-round brine tank with a liquid level indicator and a brine pump with run-dry protection. A rear-side Storz C connection is available for filling and emptying. When switching on the brine (FS 30), the dry material is automatically reduced and the distribution system settings are optimised in accordance with the change in composition of the de-icing agent. The system achieves a high level of accuracy, thanks to integrated sensors for comparison of the actual versus the target value of the control loops.

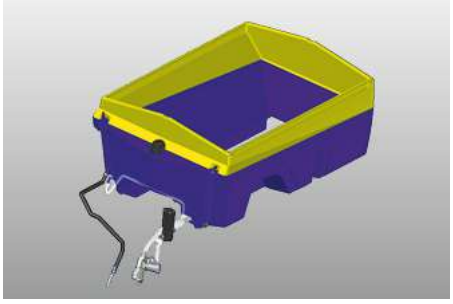

Distribution system

Spreading is carried out via a 350mm stainless steel spreading disc offering a width of 2m-6m, and the entire distribution system can be folded up and is infinitely adjustable so that the optimum distance to the ground can be set for each carrier vehicle. In combination with the EP or ES control panel, an electric spreading pattern adjustment is available as standard.

Drive options

The Syntos mountable spreader series is driven by either the carrier vehicle hydraulics, the Rotopower or a petrol engine. The trailer version has an integrated drive.

Control and information technology

Operation is via a fully travel-dependent EC control unit, which is highly ergonomic thanks to easy-grip rotary knobs with click louvres and illuminated push buttons. As options, a digital full road-speed related EP control with a large, clear graphic display or the full road-speed related ES control with 7“ colour touch screen are available.

IntelliOPS telematics platform

The Syntos spreaders can be connected to the Aebi SchmidtIntelliOPS platform which provides comprehensive monitoring, selection, reporting and analysis functions. It enables rapid performance evaluation by displaying machine activity data live on a map and uses collected data to provide detailed overviews and reports to optimise operations.

Gallery

Related products

Stratos 0.6 - 0.8m³

Spreader

Stratos D 1.1 - 1.7 m³

Spreader

Trust in our many years of uniquely diverse experience. **Get in touch with us.** We'll find the right solution for your specific challenge.

Technical data

	Syntos 08	Syntos 11	Syntos 15
Hopper			
Hopper capacity	0.8 m³	1.1 m³	1.5 m³
Pre-wet equipment			
Tank capacity integrated tank	400 / 520 l	400 / 520 / 625 l	520 / 625 l
Conveyor system			
Conveyor system	belt / auger	belt / auger	belt / auger
Distribution system			
Distribution systems	**Spreading disc:** Basic spreading disc Spreading disc diameter: 350 mm Spreading width: 2 - 6 m **Spreading disc:** Premium 5-zone mixing system Spreading disc diameter: 350 mm Spreading width: 1 - 6 m	**Spreading disc:** Basic spreading disc Spreading disc diameter: 350 mm Spreading width: 2 - 6 m **Spreading disc:** Premium 5-zone mixing system Spreading disc diameter: 350 mm Spreading width: 1 - 6 m	**Spreading disc:** Basic spreading disc Spreading disc diameter: 350 mm Spreading width: 2 - 6 m **Spreading disc:** Premium 5-zone mixing system Spreading disc diameter: 350 mm Spreading width: 1 - 6 m
Mounting/demount system			
Mounting/demount system	Demount legs	Demount legs	Demount legs
Drive system			
Type of drive	Vehicle hydraulics / Rotopower / Engine drive	Vehicle hydraulics / Rotopower / Engine drive	Vehicle hydraulics / Rotopower / Engine drive
Control system			
Control system	EC / EP / ES	EC / EP / ES	EC / EP / ES
Dimensions			
Hopper length	1,450 / 1,750 mm	1,450 / 1,750 / 2,050 mm	1,750 mm
Mounting length	1,700 / 2,000 / 2,300 / 2,600 / 2,900 mm	1,700 / 2,000 / 2,300 / 2,600 / 2,900 mm	2,000 / 2,300 / 2,600 / 2,900 mm
Hopper width	1,420 mm	1,420 mm	1,420 mm
Frame width	1,400 mm	1,400 mm	1,400 mm
Hopper height	940 / 1,030 mm	990 / 1,070 / 1,200 mm	1,150 / 1,260 mm
Weights			
Empty weight approx.	369 kg	377 kg	420 kg

	Syntos 17	Syntos A 08	Syntos A 11
Hopper			
Hopper capacity	1.7 m³	0.8 m³	1.1 m³
Pre-wet equipment			
Tank capacity integrated tank	850 l	520 l	625 l
Conveyor system			
Conveyor system	belt / auger	belt	belt
Distribution system			
Distribution systems	**Spreading disc:** Basic spreading disc Spreading disc diameter: 350 mm Spreading width: 2 - 6 m **Spreading disc:** Premium 5-zone mixing system Spreading disc diameter: 350 mm Spreading width: 1 - 6 m	**Spreading disc:** Basic spreading disc Spreading disc diameter: 350 mm Spreading width: 2 - 6 m **Spreading disc:** Premium 5-zone mixing system Spreading disc diameter: 350 mm Spreading width: 1 - 6 m	**Spreading disc:** Basic spreading disc Spreading disc diameter: 350 mm Spreading width: 2 - 6 m **Spreading disc:** Premium 5-zone mixing system Spreading disc diameter: 350 mm Spreading width: 1 - 6 m
Mounting/demount system			
Mounting/demount system	Demount legs	–	–
Drive system			
Type of drive	Vehicle hydraulics / Rotopower / Engine drive	Integrated drive / Vehicle hydraulics	Integrated drive / Vehicle hydraulics
Control system			
Control system	EC / EP / ES	EC / EP / ES	EC / EP / ES
Dimensions			
Hopper length	2,350 mm	1,700 mm	2,000 mm
Mounting length	2,600 mm	–	–
Hopper width	1,420 mm	1,500 mm	1,500 mm
Frame width	1,400 mm	–	–
Hopper height	1,100 mm	–	–

	Syntos 17	Syntos A 08	Syntos A 11
Weights			
Empty weight approx.	522 kg	790 kg	1,015 kg

	Syntos A 17
Hopper	
Hopper capacity	1.7 m^3
Pre-wet equipment	
Tank capacity integrated tank	850 l
Conveyor system	
Conveyor system	belt
Distribution system	
Distribution systems	**Spreading disc:** Basic spreading disc Spreading disc diameter: 350 mm Spreading width: 2 - 6 m **Spreading disc:** Premium 5-zone mixing system Spreading disc diameter: 350 mm Spreading width: 1 - 6 m
Drive system	
Type of drive	Integrated drive / Vehicle hydraulics
Control system	
Control system	EC / EP / ES
Dimensions	
Hopper length	2,300 mm
Hopper width	1,500 mm
Weights	
Empty weight approx.	1,200 kg

aebi schmidt group

© Aebi Schmidt Group
www.aebi-schmidt.com

Aebi Schmidt Holding AG
CH-8050 Zurich, Switzerland

All rights reserved. Technical data is subject to change.
Illustrations are not binding. Errors and amendments excepted.

Document created on 8 JUN 2024